VERSA-LINE

Submittal

TRV Trough
Versa-Line
Copper/Aluminum and
Steel Elements

☐ **TRV Trough Installation**

Specification

ENCLOSURE:

STYLE: Flat Plate
OUTLET: Stamped Louvers
Pencil Proof

LENGTHS: 2'0" thru 8'0" in 6" Increments
MAT'L: ☐ 16 Ga. CRS (Std)
☐ 14 Ga. Aluminum (Opt'l)
☐ 16 Ga. Stainless Steel (Opt'l)
☐ 14 Ga. Stainless Steel (Opt'l)
FINISH: ☐ Baked Powder (Std)
☐ Baked Metallic (Opt'l)

ELEMENT:

TYPE: ☐ Cu/AL (Mechanically Expanded)
LENGTHS: 2'0" thru 12'6" in 1" Increments for 1" & 1-1/4" Cu.
2'0" thru 8'0" in 1" Increments for 3/4" Cu.

One End Flared (Std)

TYPE: ☐ IPS Steel (Mechanically Expanded)
LENGTHS: 2'0" thru 12'6" in 1" Increments
☐ NPT Thread both Ends (Std)
☐ Beveled Ends for Field Weld (Opt'l)

See Catalog for Working Pressures

LINER:

LENGTHS: 2'0" thru 8'0" in 6" Increments
☐ No Liner Required
MAT'L: ☐ 20 Ga. Galvannealed (Opt'l)
☐ 18 Ga. CRS Painted Black (Opt'l)

VERTICAL BAFFLE:

LENGTH: 2'0" thru 8'0" in 6" Increments
MAT'L: ☐ 20 Ga. Galvannealed (Std)
☐ 18 Ga. Painted Black (Opt'l)

BRACKETS:

☐ 1/8" Flat Stock Floor Brk't w/B.B. Element Support

☐ TRV

ELEMENT TUBE SIZE	FIN SIZE HEIGHT x WIDTH	CRADLE NUMBER	A
3/4 COPPER	3 5/8 x 4 1/4	2	5 3/16
3/4 COPPER	4 1/4 x 4 1/4	3A	5 9/16
1" COPPER	3 5/8 x 4 1/4	2	5 3/8
1" COPPER	4 1/4 x 4 1/4	2	5 3/8
1 1/4 COPPER	3 5/8 x 4 1/4	2	5 1/2
1 1/4 COPPER	4 1/4 x 4 1/4	2	5 1/2
1" STEEL	4 1/4 x 4 1/4	2	5 1/2
1 1/4 STEEL	4 1/4 x 4 1/4	2	5 11/16
2" STEEL	4 1/4 x 4 1/4	1	5 7/16

NOTES:

1. Trough Liner Optional (Not Shown).
2. Floor Grille is by Other or Consult Factory for Availbility.

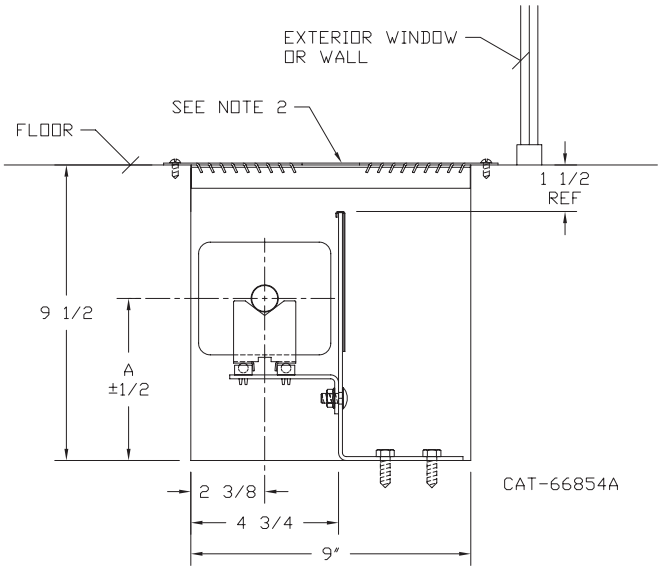

STERLING®
COMMERCIAL HYDRONIC PRODUCTS
260 North Elm St., Westfield, MA 01085
(413) 564-5535 Fax: (413) 562-8437
www.sterlingheat.com

MADE IN THE USA

10/22

PROJECT: _____ **DATE:** _____
LOCATION: _____
ARCHITECT: _____
ENGINEER: _____
CONTRACTOR: _____
PO NUMBER: _____

STYLE "TR" TROUGH VERSA-LINE

COPPER/ALUMINUM ELEMENTS

ALL RATINGS ARE IN BTU/HR/LIN FT AND BASED ON 3 FPS VELOCITY, 65° EAT

TUBE SIZE	CATALOG DESIGNATION	FIN SIZE HEIGHT X WIDTH	FINS PER FT.	FIN THICKNESS IN INCHES	TROUGH DEPTH AND HEIGHT IN INCHES	STEAM 215° FACTOR	HOT WATER (AVG.) 200°	190°	180°	170°	160°	150°	140°	130°	120°
							CORRECTION FACTORS FOR AVERAGE WATER TEMPERATURES								
						1.00	0.86	0.78	0.69	0.61	0.53	0.45	.40	.33	.26
3/4"	C3/4-433	3-5/8" x 4-1/4"	32	.020	9 1/2 x 9	1120	960	870	770	680	590	500	450	370	290
	C3/4-434		40		9 1/2 x 9	1340	1150	1050	920	820	710	600	540	440	350
	C3/4-435		50		9 1/2 x 9	1480	1270	1150	1020	900	780	670	590	490	380
1"	C433	3-5/8" x 4-1/4"	32	.020	9 1/2 x 9	1170	1010	910	810	710	620	530	470	390	300
	C434		40		9 1/2 x 9	1300	1120	1010	900	790	690	590	520	430	340
	C435		50		9 1/2 x 9	1480	1270	1150	1020	900	780	670	590	490	380
1-1/4"	C1433	3-5/8" x 4-1/4"	32	.020	9 1/2 x 9	1210	1040	940	830	740	640	540	480	400	310
	C1434		40		9 1/2 x 9	1330	1140	1040	920	810	700	600	530	440	350
	C1435		50		9 1/2 x 9	1480	1270	1150	1020	900	780	670	590	490	380
3/4"	C3/4-43	4-1/4" SQ.	32	.020	9 1/2 x 9	1240	1070	970	860	760	660	560	500	410	320
	C3/4-44		40		9 1/2 x 9	1480	1270	1150	1020	900	780	670	590	490	380
	C3/4-45		50		9 1/2 x 9	1530	1320	1190	1060	930	810	690	610	500	400
1"	C43	4-1/4" SQ.	32	.020	9 1/2 x 9	1240	1070	970	860	760	660	560	500	410	320
	C44		40		9 1/2 x 9	1380	1190	1080	950	840	730	620	550	460	360
	C45		50		9 1/2 x 9	1550	1330	1210	1070	950	820	700	620	510	400
1-1/4"	C143	4-1/4" SQ.	32	.020	9 1/2 x 9	1300	1120	1010	900	790	690	590	520	430	340
	C144		40		9 1/2 x 9	1540	1320	1200	1060	940	820	690	620	510	400
	C145		50		9 1/2 x 9	1580	1360	1230	1090	960	840	710	630	520	410

Notes: 1. Ratings are based on 24 sq. in. of free area per linear foot of air inlet and outlet each.
2. For systems using steam, consult factory.

STEEL ELEMENTS

ALL RATINGS ARE IN BTU/HR/LIN FT AND BASED ON 3 FPS VELOCITY, 65° EAT

TUBE SIZE	CATALOG DESIGNATION	FIN SIZE HEIGHT X WIDTH	FINS PER FT.	FIN THICKNESS IN INCHES	TROUGH DEPTH AND HEIGHT IN INCHES	STEAM 215° FACTOR	HOT WATER (AVG.) 200°	190°	180°	170°	160°	150°	140°	130°	120°
							CORRECTION FACTORS FOR AVERAGE WATER TEMPERATURES								
						1.00	0.86	0.78	0.69	0.61	0.53	0.45	.40	.33	.26
1"	S43	4-1/4" SQ.	32	.032	9 1/2 x 9	1220	1050	950	840	740	650	550	490	400	320
	S44		40		"	1380	1190	1080	950	840	730	620	550	460	360
	S45		50		"	1460	1260	1140	1010	890	770	660	580	480	380
1-1/4"	S143	4-1/4" SQ.	32	.032	9 1/2 x 9	1130	970	880	780	690	600	510	450	370	290
	S144		40		"	1370	1180	1070	950	840	730	620	550	450	360
	S145		50		"	1430	1230	1120	990	870	760	640	570	470	370
2"	S242	4-1/4" SQ.	25	.032	9 1/2 x 9	1050	900	820	720	640	560	470	420	350	270
	S243		32		"	1220	1050	950	840	740	650	550	490	400	320

Notes: 1. Ratings are based on 24 sq. in. of free area per linear foot of air inlet and outlet each.
2. For systems using steam, consult factory.

Design Data

COMMERCIAL FINNED TUBE CHARTS FOR RATING CORRECTIONS

For assistance with ratings and selection, please use our online Specifier.

CORRECTION FACTORS FOR WATER TEMPERATURES AND AIR TEMPERATURES OTHER THAN STANDARD

AVERAGE WATER TEMP. °F	ENTERING AIR TEMPERATURE °F														
	45	55	STD 65	70	75	80	85	90	95	100	110	120	130	140	150
90	.19	.13	.11	.06											
100	.25	.19	.15	.11	.08	.06									
110	.31	.25	.20	.16	.13	.11	.08	.06							
120	.38	.31	.26	.21	.19	.16	.13	.11	.08	.06					
130	.45	.38	.33	.28	.25	.21	.19	.16	.13	.11	.06				
140	.53	.45	.40	.34	.31	.28	.25	.21	.19	.16	.11	.06			
150	.61	.53	.45	.41	.38	.34	.31	.28	.25	.21	.16	.11	.06		
160	.69	.61	.53	.49	.45	.41	.38	.34	.31	.28	.21	.16	.11	.06	
170	.77	.69	.61	.57	.53	.49	.45	.41	.38	.34	.28	.21	.16	.11	.06
180	.86	.77	.69	.65	.61	.57	.53	.49	.45	.41	.34	.28	.21	.16	.11
190	.95	.86	.78	.73	.69	.65	.61	.57	.53	.49	.41	.34	.28	.21	.16
200	1.05	.95	.86	.82	.77	.73	.69	.65	.61	.57	.49	.41	.34	.28	.21
210	1.14	1.05	.95	.91	.86	.82	.77	.73	.69	.65	.57	.49	.41	.34	.28
▶ 215 (STD.)	1.19	1.09	1.00	.95	.91	.86	.82	.77	.73	.69	.61	.53	.45	.38	.31
220	1.24	1.14	1.05	1.00	.95	.91	.86	.82	.77	.73	.65	.57	.49	.41	.34
230	1.34	1.24	1.14	1.09	1.05	1.00	.95	.91	.86	.82	.73	.65	.57	.49	.41
240	1.44	1.34	1.25	1.19	1.14	1.09	1.05	1.00	.95	.91	.82	.73	.65	.57	.49
250	1.55	1.44	1.34	1.29	1.24	1.19	1.14	1.09	1.05	1.00	.91	.82	.73	.65	.57
260	1.66	1.55	1.44	1.39	1.34	1.29	1.24	1.19	1.14	1.09	1.00	.91	.82	.73	.65
270	1.76	1.66	1.55	1.50	1.44	1.39	1.34	1.29	1.24	1.19	1.09	1.00	.91	.82	.73
280	1.87	1.76	1.66	1.60	1.55	1.50	1.44	1.39	1.34	1.29	1.19	1.09	1.00	.91	.82
290	1.99	1.87	1.76	1.71	1.66	1.60	1.55	1.50	1.44	1.39	1.29	1.19	1.09	1.00	.91
300	2.10	1.99	1.87	1.82	1.76	1.71	1.66	1.60	1.55	1.50	1.39	1.29	1.19	1.09	1.00

CORRECTION FACTORS FOR STEAM PRESSURES AND AIR TEMPERATURES OTHER THAN STANDARD

STEAM PRESSURE		ENTERING AIR TEMPERATURE °F														
GAUGE	ABS. PSI	TEMP. °F	45	55	STD 65	70	75	80	85	90	100	110	120	130	140	150
(VAC) 15" HG	7.32	178.9	0.90	0.80	0.70	0.65	0.60	0.56	0.51	0.45	0.39	0.32	0.25	0.18	0.13	0.08
(VAC) 10"	9.78	192.2	1.02	0.91	0.81	0.76	0.71	0.66	0.62	0.55	0.48	0.40	0.33	0.26	0.20	0.14
(VAC) 5"	12.25	202.9	1.11	1.00	0.90	0.85	0.79	0.75	0.70	0.63	0.56	0.48	0.40	0.33	0.27	0.20
0 PSI	14.696	212.0	1.19	1.09	0.97	0.92	0.87	0.82	0.77	0.70	0.63	0.54	0.46	0.38	0.31	0.25
▶ .899	15.595	215.0	1.22	1.11	1.00	0.95	0.90	0.84	0.80	0.75	0.65	0.57	0.48	0.40	0.33	0.26
5	19.70	227.1	1.34	1.22	1.11	1.05	1.00	0.95	0.90	0.81	0.75	0.66	0.57	0.49	0.41	0.34
10	24.70	239.4	1.45	1.33	1.22	1.17	1.11	1.05	1.00	0.91	0.85	0.75	0.66	0.58	0.50	0.42
15	29.70	249.8	1.55	1.43	1.31	1.26	1.20	1.14	1.09	1.00	0.94	0.84	0.75	0.66	0.57	0.49
20	34.70	258.5	1.63	1.52	1.40	1.33	1.28	1.23	1.17	1.07	1.02	0.92	0.82	0.73	0.64	0.55
25	39.70	266.8	1.71	1.59	1.47	1.41	1.36	1.30	1.25	1.15	1.09	0.98	0.89	0.80	0.71	0.62
30	44.70	274.0	1.78	1.66	1.54	1.48	1.42	1.37	1.31	1.21	1.15	1.05	0.95	0.85	0.76	0.68
40	54.70	286.7	1.91	1.79	1.66	1.61	1.54	1.49	1.43	1.32	1.27	1.16	1.06	0.97	0.87	0.78
50	64.70	297.7	2.02	1.90	1.77	1.71	1.65	1.60	1.54	1.42	1.37	1.26	1.16	1.06	0.96	0.87
60	74.70	307.3	2.10	2.00	1.87	1.81	1.75	1.69	1.63	1.51	1.47	1.35	1.25	1.15	1.05	0.95
70	84.70	316.0	2.20	2.09	1.95	1.89	1.83	1.77	1.71	1.59	1.55	1.44	1.33	1.23	1.12	1.03
80	94.70	323.9	2.27	2.17	2.03	1.97	1.91	1.85	1.80	1.69	1.63	1.52	1.41	1.31	1.20	1.10
90	104.70	331.2	2.36	2.24	2.11	2.05	1.98	1.93	1.87	1.74	1.70	1.59	1.48	1.38	1.28	1.17
100	114.70	337.9	2.43	2.31	2.18	2.11	2.05	2.00	1.94	1.81	1.77	1.65	1.54	1.44	1.33	1.23
125	139.70	352.9	2.59	2.47	2.33	2.27	2.21	2.16	2.10	1.96	1.92	1.80	1.69	1.59	1.48	1.38
150	164.70	365.9	2.73	2.62	2.47	2.43	2.35	2.29	2.23	2.08	2.05	1.94	1.82	1.72	1.61	1.51
175	189.70	377.4	2.86	2.74	2.60	2.54	2.47	2.41	2.35	2.21	2.17	2.05	1.95	1.85	1.73	1.63
200	214.70	387.8	2.95	2.85	2.71	2.63	2.58	2.52	2.47	2.31	2.29	2.17	2.06	1.96	1.84	1.75

From Keenan and Keyes — Linear Interpolation. NOTE: Gauge pressure should be corrected for altitude.

Rate of pitch for steam ½"drop over 20-foot run.

Design Data

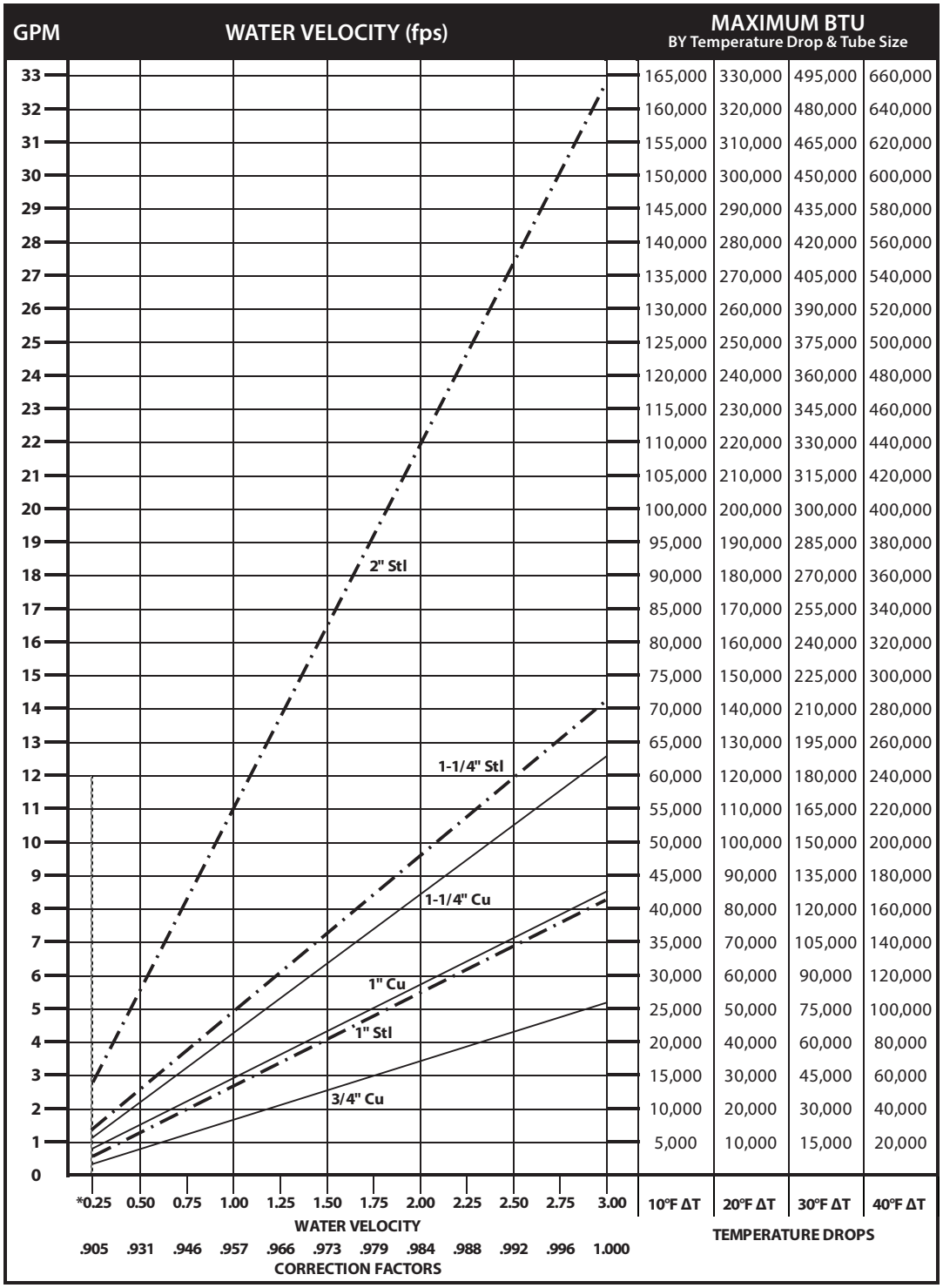

*Do not design below .25 fps.

DYNAMIC FORMULAS

BTU = GPM x 500 x TD

$$GPM = \left(\frac{BTU}{500}\right) \div TD$$

$$TD = \left(\frac{BTU}{500}\right) \div GPM$$

Pressure Drop at Given Water Velocities (Feet of Water per 100 ft. of pipe) based on Hazen - Williams calculation

Nominal Pipe Size	Water Velocity (ft/sec)											
	0.25	0.50	0.75	1.00	1.25	1.50	1.75	2.00	2.25	2.50	2.75	3.00
3/4" Copper	0.06	0.20	0.42	0.72	1.09	1.53	2.04	2.61	3.25	3.95	4.71	5.53
1" Copper	0.04	0.15	0.32	0.54	0.81	1.14	1.52	1.94	2.42	2.94	3.50	4.11
1 1/4" Copper	0.03	0.12	0.25	0.43	0.64	0.90	1.20	1.54	1.92	2.33	2.78	3.26
1" Steel	0.04	0.15	0.32	0.54	0.81	1.14	1.52	1.95	2.42	2.94	3.51	4.12
1 1/4" Steel	0.03	0.11	0.23	0.40	0.60	0.84	1.12	1.44	1.79	2.17	2.59	3.05
2" Steel	0.02	0.07	0.14	0.25	0.37	0.52	0.69	0.89	1.10	1.34	1.60	1.88

Design Data

GUARANTEED WORKING PRESSURES

1" IPS — 780 at Temperatures up to 650˚F.
1-1/4" IPS — 660 at Temperatures up to 650˚F.
2" IPS — 405 at Temperatures up to 650˚F.
1-1/4" CU — 194 at Temperatures up to 300˚F.
1" CU 204 at Temperatures up to 300˚F.
3/4" CU 218 PSI at Temperatures up to 300˚F.

MAXIMUM PRESSURES AT OTHER TEMPERATURES ARE AVAILABLE UPON REQUEST.

Pipe Water Capacities and Quantities Circulated at Velocity of 3 Feet Per Second

Nominal Pipe Size	Pipe I.D. (inches)	Gals Per Lin. Ft.	GPM @ 3' per sec Velocity
3/4" Copper	0.835	0.028	5.12
1" Copper	1.077	0.047	8.52
1 1/4" Copper	1.315	0.071	12.70
1" Steel	1.075	0.047	8.49
1 1/4" Steel	1.395	0.079	14.29
2" Steel	2.115	0.183	32.85

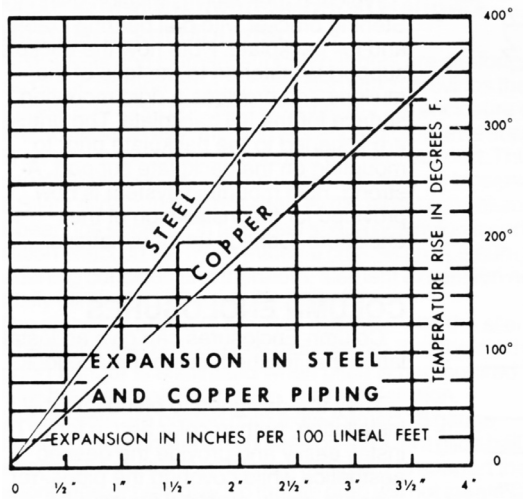

Glycol Correction Factors

Fluid Temperature 200°F

% Solution	Ethylene Glycol	Propylene Glycol
20	.952	.988
30	.921	.968
40	.888	.943
50	.852	.912

Fluid Temperature 180°F

% Solution	Ethylene Glycol	Propylene Glycol
20	.946	.982
30	.913	.961
40	.879	.934
50	.842	.902

Fluid Temperature 140°F

% Solution	Ethylene Glycol	Propylene Glycol
20	.934	.97
30	.898	.946
40	.861	.916
50	.821	.881

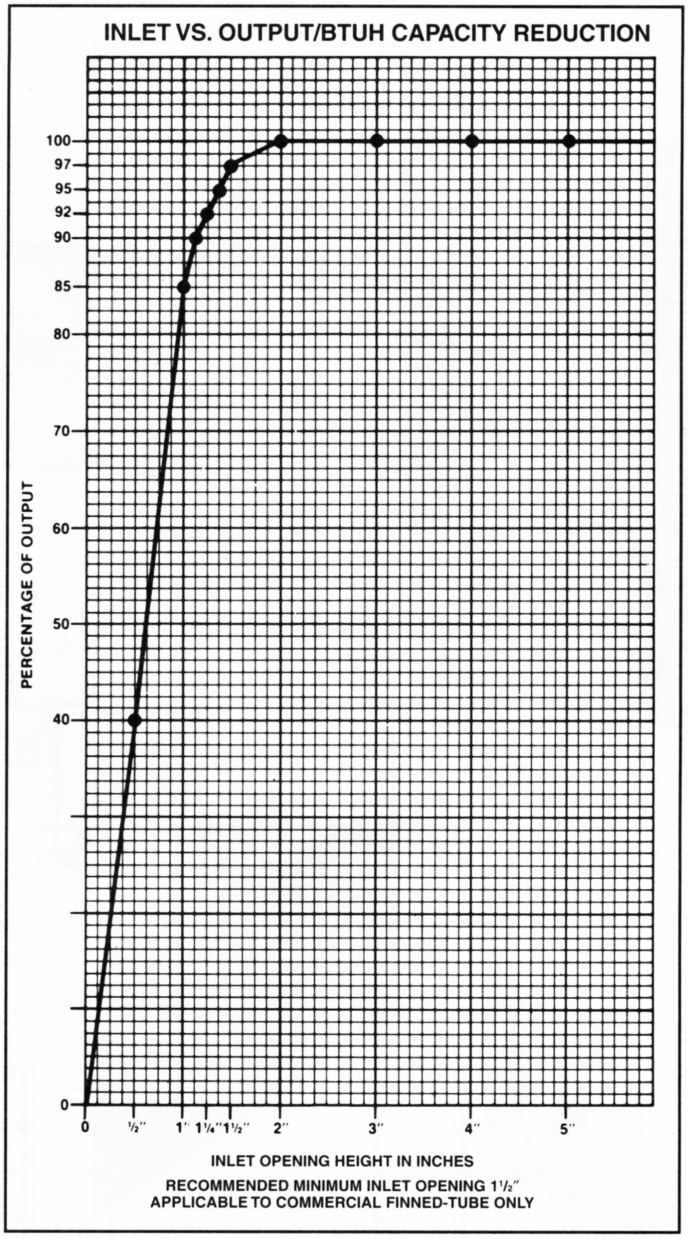

ALTITUDE FACTORS

Approximate factors for convective heat value at varying altitudes

Altitude	Ferrous Units	Copper Alum. Units
Sea Level	1.000	1,000
1,000 ft.	.984	.969
2,000 ft.	.968	.938
3,000 ft.	.952	.908
4,000 ft.	.936	.878
5,000 ft.	.920	.850
6,000 ft.	.904	.822
7,000 ft.	.889	.795
8,000 ft.	.874	.768
9,000 ft.	.859	.743
10,000 ft.	.844	.718
15,000 ft.	.771	.603
20,000 ft.	.703	.502